A sleek and open bridge design

Queen Máxima

In 2016 Mobilis TBI completed the Queen Máxima bridge, an energy-neutral tail bridge named after the Dutch queen. It was commissioned by the city of Alphen aan den Rijn and crosses the river Oude Rijn. The implementation of energy-neutral requirements was a unique selling point in the offer of Mobilis TBI. It is achieved by the installation of a field of solar panels that can generate the energy for the moving of the steel bridge parts, lighting and all other equipment.

The Queen Máxima bridge (photo 1) has three adjacent bridge decks, in which two parallel tail bridges are situated. The tail bridge at the east side is connected to one of the decks for the road traffic and to the deck for the cycling/pedestrian lane. The tail bridge at the west side is only connected to a deck for road traffic (fig. 4).

The concrete land span bridges are 140 and 50 m long and the steel tail bridge decks are approximately 19 m. The tails contain the counterweights that ensure the smooth opening and closing of the bridge with a minimum of energy consumption. The project is characterized by its unique design, which tended to be as sleek and as open as possible.

Architectural design

The architectural design was very important to the client. Therefore, Mobilis TBI closely collaborated with the architect, Syb van Breda & Co Architects and designed a bridge that fully exploited the structural possibilities of the applied materials and met the wishes of the client to be elegant.
At first a single deck bridge was specified, so traffic lanes could be assigned freely. This would have resulted in a width of the deck of about 30 metres and a very dark area under the bridge. In the last stage of the tender the architect proposed creating three separate decks. This resulted in a more open construction and, very importantly, in the opportunity to build tail bridges.

If the deck had been about 30 metres in width it would have been impossible to build tail bridges. Instead, it would have been a bascule bridge. The difference between a tail bridge and a bascule bridge is, that the counterweights of a tail bridge are moving in the open air, besides the foreland bridges and, in closed position, they are visible above the deck (photo 2), while a bascule bridge has its counterweight under the bridge, mostly in a large cellar. As a result, a bascule bridge has higher lifting capacity than a tail bridge but due to the large cellar is less aesthetically appealing.

Another wish of the architect was to make a slender deck construction with no visible cross beams. So the concrete decks of the land span bridges have a continuous height of about 1.2 m in combination with spans of 27.5 m. On the locations of the intermediate supports, the bridges for the road traffic are supported by two conical columns. The bridge for cycling/pedestrians is supported there by one column. All columns have a circular cross section, with a diameter varying from 1.5 m at the base to 1.2 m at the top.

The column under the bridge for bicycles and pedestrians is placed eccentrically in the transversal direction. To make the construction stable this bridge is connected to the adjacent bridge for road traffic, using concrete beams with a circular cross section (photo 3 and fig. 6).

The design of the steel bridges was given a lot of attention. The steel river spans have the same deck height as the land span bridges and the tails are beautifully shaped. The use of tail bridges resulted in open structures for the concrete piers adjacent to the river.
Details also had the attention of the architect. This resulted in a

André Bouman, Nick Nass
Mobilis TBI

1 Queen Máxima bridge, Alphen aan den Rijn
credits photo 1 and 2: Syb van Breda & Co Architects
2 Tails with counterweights, visible above the deck
3 The stairs for pedestrians to reach the deck and the circular beam to connect the decks
4 Top view on the bridge

bridge

2

3

beautiful shape of the handrail, the lighting masts and the signs for the road traffic and the shipping traffic. Also the lighting on the bridge and under the bridge was designed by the architect.

The space under the bridge at the south side will be turned into an area with foot paths and a water garden, with stairs as a connection for pedestrians to reach the bridge deck (photo 3).

Structural design

As can be seen in figures 4, 5 en 6, each of the three decks of the land span bridge in longitudinal direction is a continuous beam without visible joints at the locations of the intermediate supports. On both sides of the river the adjacent deck spans form rigid portals, together with the underlying columns. In this way, the movable bridge has rigid bearings in the horizontal direction and there is also a rigid support to withstand the load of a ship colliding with the river piers.
At the locations of the other piers, including the abutments, the bridge is supported by rubber bearings.

The five columns for each intermediate pier and the columns for the river piers are placed on a continuous foundation beam. At the intermediate supports, the foundation beams are supported by prefab concrete piles 450 mm square. At the river piers, steel tubes with a diameter of 610 mm are used for the foundation, in order to have enough strength to withstand a ship collision. Both prefab and steel piles are raking at 1:10. The abutments are grounded on reinforced soil constructions.

4

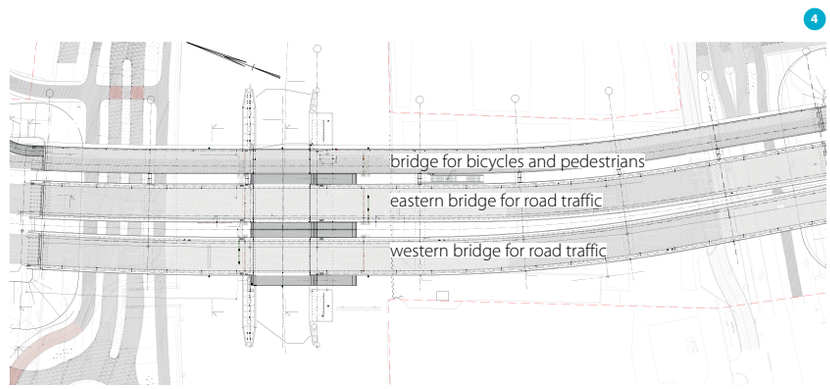

5 (a) Longitudinal cross section; (b) river crossing with tail bridges
6 Cross section of the deck
7 The three dimensional finite element model designed with Scia Engineer
8 A view of the placing of the second movable deck
credits: Hollandia Infra and Sarens NL

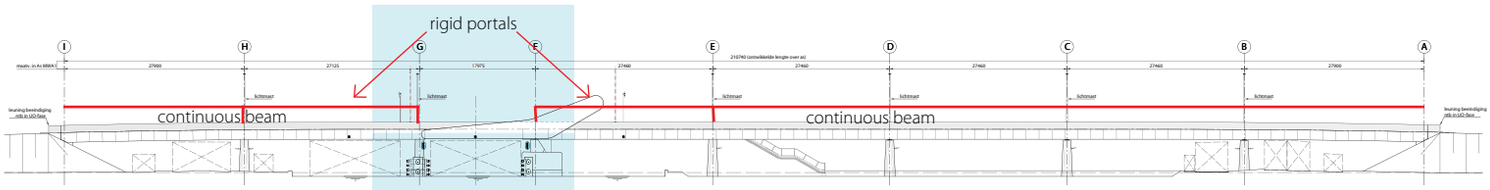

5a

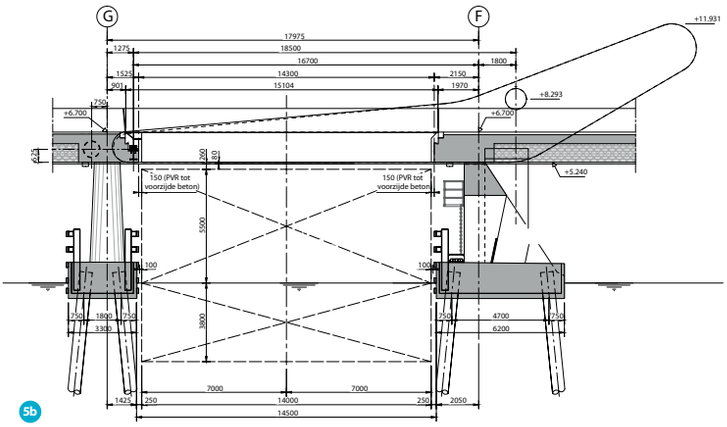

5b

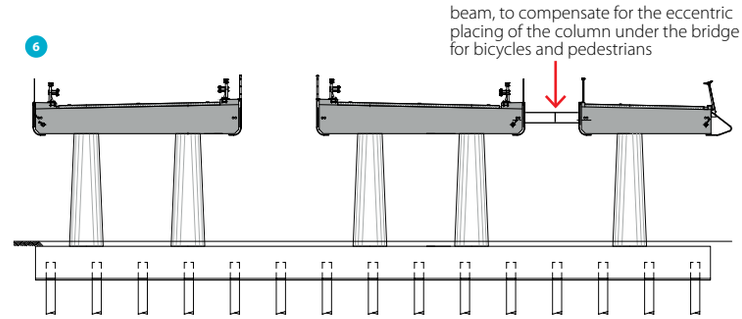

6

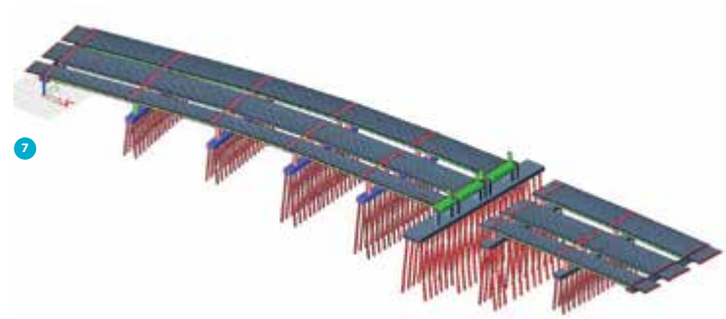

7

The whole structure with all the loads was modelled in a three-dimensional finite element model with the Scia Engineer software (fig. 7).

Deck construction

The deck spans are made of prefab, pre-stressed beams with a cast in-situ concrete layer on top to form the traffic deck. At the location of the supports, prefabricated beams are connected by wet joints. In this way the prefab beams form a continuous girder and no cross beams are visible (photos 3 and 9).

Special load case

Additional to the traffic loads as listed in the Eurocode, the contract prescribed a special load, namely the transport of heavy concrete beams made by Consolis Spanbeton in Koudekerk aan den Rijn. Spanbeton, who also made the prefab concrete beams for the Queen Máxima bridge, is very happy with the realisation of the bridge, because now they can trans-

8

9

port without restrictions, beams with a length of about 100 m. The impact of this additional requirement on the structural design was minimal.

Execution

Because of the slender design, in a lot of places it was difficult to apply all the reinforcement that was needed. Especially at the locations of the wet joints (photo 10) a large amount of reinforcement was required.
As can be seen on photo 11, the circular coupling beam between the road deck and the pedestrian deck also needed much reinforcement. This beam has to compensate the eccentric placing of the deck for cyclists and pedestrians which results in bending moments and shear forces.

Extra care was taken when the steel movable decks (weighing 220 and 270 ton) were placed. The decks were placed using a crane with a fixed position on a pontoon. This combination as a whole was moved in the right position to situate the decks (photo 8).

Movement of the tail bridge

Each of the two separate movable decks of the river span has two tails supported by a column of the river pillar. The tails are filled with ballast, used as the counterweight. The movement of each bridge is enabled by two hydraulic cylinders, which are located in a recess in the columns of the bridge pillars. According to the contract the bridge is engineered to allow a non-availability for shipping of 3 days a year.
To withstand a collision between the bridge deck and a ship, the front of the deck is supported in the horizontal direction perpendicular to the bridge axis.

Environment

The Queen Máxima bridge is energy neutral and a sustainable structure; the slender design of the bridge required considerably less material than other types of bridges would have. The impact on the environment is therefore low. The bridge was opened for traffic on December 21, 2016. ☒

10

11

9 A view under the foreland bridges
credtis: Syb van Breda & Co Architects

10 A wet cast in situ connection combines prefabricated beams to a continuous deck construction above the piers
credits: Mobilis TBI

11 The reinforcement of the concrete coupling beams between the road deck and the pedestrian deck

● PROJECT DETAILS

client Alphen aan de Rijn
contractor Mobilis TBI
parallel contractors Hollandia Infra (steel bridges)
Aannemingsmaatschappij Van Gelder (roads and earth works)
prefab concrete beams Consolis Spanbeton
architect Syb van Breda & Co Architects